ICF-SW15

SERVICE MANUAL

本资料由OKXIA视听皮带资源库www.okxia.cn提供

US Model
Canadian Model
AEP Model
UK Model
E Model
Australian Model
Tourist Model

SPECIFICATIONS

Frequency range	FM:	76 – 108 MHz (US, Canadian, E, Australian, Tourist models) 87.6 – 107.5 MHz (AEP, UK, Italian, Saudi Arabia models)
	IF:	10.7 MHz
	SW1:	5.775 – 6.425 MHz
	SW2:	6.875 – 7.525 MHz
	SW3:	9.375 – 10.025 MHz
	SW4:	11.615 – 12.265 MHz
	SW5:	15.00 – 15.65 MHz
	SW6:	17.50 – 18.15 MHz
	SW7:	21.325 – 21.975 MHz
	1st IF:	10.7 MHz
	2nd IF:	455 kHz
	MW:	530 – 1,710 kHz (US, Canadian, E, Australian, Tourist models) 531 – 1,602 kHz (AEP, UK, Italian, Saudi Arabia models)
	IF:	455 kHz
Antenna	FM/SW:	Telescopic antenna
	MW:	Built-in ferrite bar antenna
Speaker		Approx. 6.6 cm (2⅝ inches) dia. 4Ω
Power output		260 mW (at 10% harmonic distortion)
Output		Earphone jack (minijack)
Power requirements		4.5 V DC, three R6 (size AA) batteries DC IN 4.5 V jack accepts: AC power adaptor AC-E45M (not supplied) Car battery cord DCC-E145L (not supplied)
Battery life		Approx. 27 hours with Sony SUM-3 (NS)
Dimensions		Approx. 165 × 99 × 35 mm (w/h/d) (6½ × 4 × 1 7/16 inches)
Weight		Approx. 380 g (13.4 oz) incl. batteries
Supplied accessories		Carrying case (1), Short wave guide (1)

Accessories not supplied AC power adaptor *AC-E45M
Car battery cord DCC-E145L
LW/MW/SW wide range antenna AN-1
Earphone ME-81

* The voltage of power supply is different depending on the country. Please buy an AC power adaptor in the country where the radio is to be used.

Design and specifications subject to change without notice.

MICROFILM

Features

- FM/MW/SW1-7 9 band receiver with high sensitivity and selectivity.
- Band spread system enables you to easily tune in SW stations.
- Dual conversion circuit effectively reduces SW bands interference from other SW stations.

NOTE: ALL CORRECTIONS AND SUPPLEMENTS ARE ATTACHED TO THE BACK OF THE MANUAL.

Notes

- When the AC power adaptor is not used, be sure to unplug it both from the DC IN 4.5 V jack and from a wall outlet.
- Use only the AC power adaptor AC-E45M (not supplied). Do not use any other AC power adaptor.

Polarity of the plug

FM/MW/SW1-7 9 BAND RECEIVER

SONY®

https://315kkk.com

ICF-SW15

SERVICE MANUAL

US Model
Canadian Model
AEP Model
UK Model
E Model
Australian Model
Tourist Model

SPECIFICATIONS

Frequency range	FM:	76 – 108 MHz (US, Canadian, E, Australian, Tourist models) 87.5 – 107.5 MHz (AEP, UK, Italian, Saudi Arabia models)
	IF:	10.7 MHz
	SW1:	5.775 – 6.425 MHz
	SW2:	6.875 – 7.525 MHz
	SW3:	9.375 – 10.025 MHz
	SW4:	11.615 – 12.265 MHz
	SW5:	15.00 – 15.65 MHz
	SW6:	17.50 – 18.15 MHz
	SW7:	21.325 – 21.975 MHz
	1st IF:	10.7 MHz
	2nd IF:	455 kHz
	MW:	530 – 1,710 kHz (US, Canadian, Australian, Tourist models) 531 – 1,602 kHz (AEP, UK, Italian, Saudi Arabia models)
	IF:	455 kHz
Antenna	FM/SW:	Telescopic antenna
	MW:	Built-in ferrite bar antenna
Speaker	Approx.	6.5 cm (2⅝ inches) dia.
Power output	260 mW at 10% harmonic distortion	
Output	Earphone jack (mini jack)	
Power requirements	4.5 V DC: Three R6 (size AA) batteries	
	DC IN 4.5 V jack accepts: AC power adaptor AC-E45M (not supplied) or battery cord DCC-E14SL (not supplied)	
Battery life	Approx. 27 hours with Sony SUM-3 (NS) batteries	
Dimensions	Approx. 105 × 68 × 35 mm (w/h/d) (6⅛ × 4 × 1⅜ inches)	
Weight	Approx. 360 g (13.4 oz) incl. batteries	
Supplied accessories	Carrying case (1), Short wave guide (1)	
Accessories not supplied	AC power adaptor *AC-E45M Car battery cord DCC-E14SL LW/MW/SW wide range antenna AN-1 Earphone MS-61	

* The voltage of power supply is different depending on the country. Please buy an AC power adaptor in the country where the radio is to be used.

MICROFILM

Design and specifications subject to change without notice.

Features

- FM/MW/SW1-7 9 band receiver with high sensitivity and selectivity.
- Band scanning system enables you to easily tune in SW stations.
- Dual conversion circuit effectively reduces SW bands interference from other SW stations.

NOTE: ALL CORRECTIONS AND SUPPLEMENTS ARE ATTACHED TO THE BACK OF THE MANUAL.

Notes

- When the AC power adaptor is not used, be sure to unplug it both from the DC IN 4.5 V jack and from a wall outlet.
- Use only the AC power adaptor AC-E45M (not supplied). Do not use any other AC power adaptor.

Polarity of the plug

FM/MW/SW1-7
9 BAND RECEIVER

SONY®

eps-15-15kk

Parts Identification

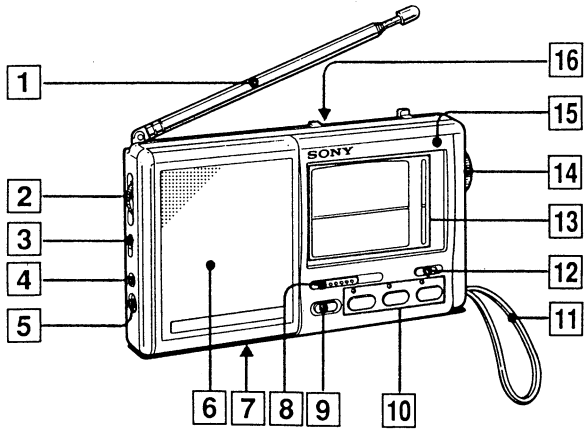

1 **Telescopic antenna**
2 **VOLUME control**
3 **TONE (MUSIC/NEWS) selector**
MUSIC:for listening to the music
NEWS: for listening to news, etc.
4 **(earphone) jack**
5 **DC IN 4.5 V (external power input) jack**
6 **Speaker**
7 **Battery compartment (bottom)**
8 **SW BAND SELECTOR**
9 **OFF (power off) button**
10 **POWER ON/BAND FM/MW/SW buttons and indicators**
When you press one of the buttons, the unit is turned on and the indicator lights up.
11 **Hand strap**
12 **HOLD switch**
Slide it in the direction of the arrow (HOLD):
When listening, to avoid accidental change of the functions.
When not using, to prevent accidental pressing to turn the power on.
13 **Dial scales**
14 **TUNING control**
15 **TUNE (tuning) indicator**
The indicator lights up when a signal is received.
16 **Stand (rear)**

B **How to use the stand**

SECTION 1
DIAL POINTER SETTING

https://315kkk.com

Note : Follow the assembly procedure in the numerical order given.

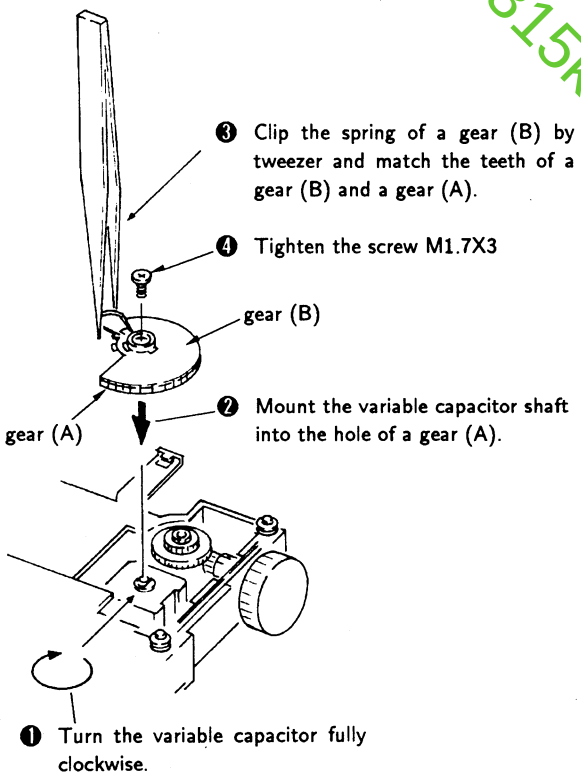

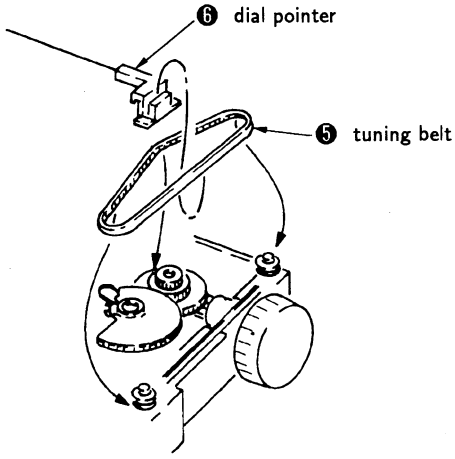

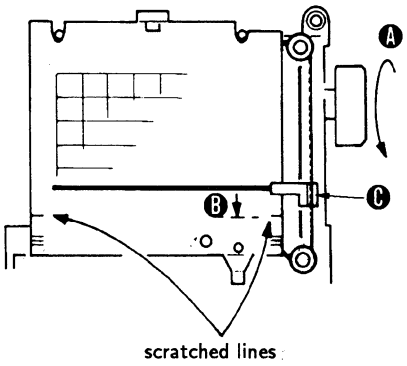

❼ First, turn the tuning shaft fully in the arrow Ⓐ direction. Move only the dial pointer in the arrow Ⓑ direction and set it on the scratched lines on the dial scale plate. Apply suitable locking compound to Ⓒ portion.

Parts Identification

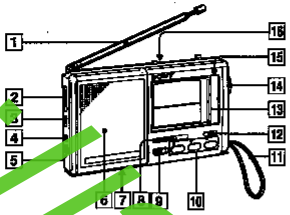

1 Telescopic antenna
2 VOLUME control
3 TONE (MUSIC/NEWS) selector
MUSIC: for listening to the music
NEWS: for listening to news, etc.
4 Φ (earphone) jack
5 DC IN 4.5 V (external power input) jack
6 Speaker
7 Battery compartment (bottom)
8 SW BAND SELECTOR
9 OFF (power off) button
10 POWER ON/BAND FM/MW/SW buttons and indicators
When you press one of the buttons, the unit is turned on and the indicator lights up.
11 Hand strap
12 HOLD switch
Slide it in the direction of the arrow (HOLD):
When listening, to avoid accidental change of the functions.
When not using, to prevent accidental pressing to turn the power on.
13 Dial scales
14 TUNING control
15 TUNE (tuning) indicator
The indicator lights up when a signal is received.
16 Stand (rear)

Ⓟ How to use the stand

SECTION 1
DIAL POINTER SETTING

Note : Follow the assembly procedure in the necessary order given.

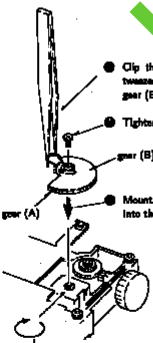

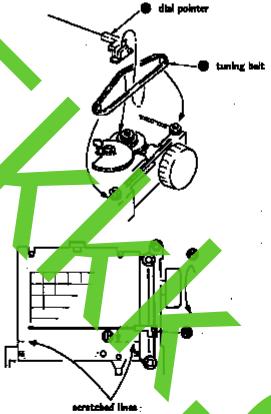

● First, turn the tuning shaft fully in the arrow ● direction. Move only the dial pointer in the arrow ● direction and set it on the scratched lines on the dial scale plate. Apply the cable locking compound to ● portion.

s.113 15KK.co

SECTION 2
ELECTRICAL ADJUSTMENTS

[MW SECTION]

BAND switch : MW

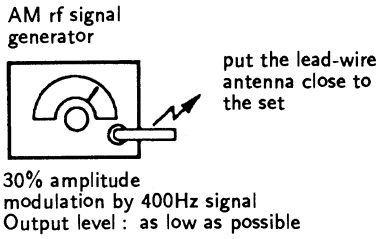

[SW SECTION]

BAND switch : SW

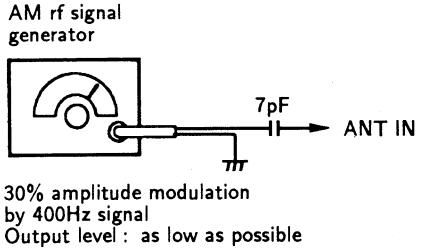

[FM SECTION]

BAND switch : FM

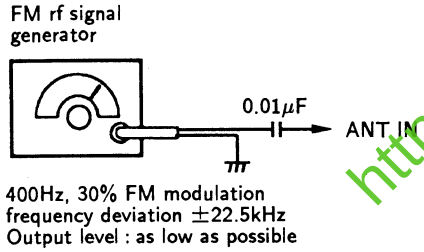

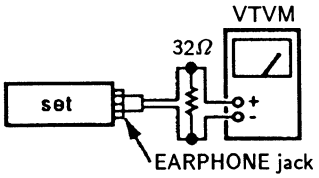

- Repeat the procedures in each adjustment several times, and the frequency coverage and tracking adjustments should be finally done by the trimmer capacitors.
- SW1 to 7 Tracking Adjustment frequencies are in a line on the scale.
  Therefore, on adjusting, first SW1 6.1 MHz and after adjust SW2 to 7 Tracking without moving the dial pointer.

( ) : AEP, UK, Germany, Italian, Saudi Arabian model

MW IF ADJUSTMENT	
Adjust for a maximum reading on VTVM.	
T3	455 kHz

MW FREQUENCY COVERAGE ADJUSTMENT	
Adjust for a maximum reading on VTVM.	
L15	520 kHz
CT2-3	1750 kHz (1650 kHz)

MW TRACKING ADJUSTMENT	
Adjust for a maximum reading on VTVM.	
L12	620 kHz
CT2-4	1400 kHz

SW IF (1) ADJUSTMENT	
Adjust for a maximum reading on VTVM.	
T1	10.6 MHz

SW IF (2) ADJUSTMENT	
Adjust for a maximum reading on VTVM.	
T2	455 kHz

SW1 FREQUENCY COVERAGE ADJUSTMENT	
Adjust for a maximum reading on VTVM.	
T4	5.75 MHz
CT1	6.45 MHz

SW1 TRACKING ADJUSTMENT	
Adjust for a maximum reading on VTVM.	
L1	6.1 MHz

SW2 TRACKING ADJUSTMENT	
Adjust for a maximum reading on VTVM.	
L2	7.2 MHz

SW3 TRACKING ADJUSTMENT	
Adjust for a maximum reading on VTVM.	
L3	9.7 MHz

SW4 TRACKING ADJUSTMENT	
Adjust for a maximum reading on VTVM.	
L4	11.94 MHz

https://315kkk.com

SECTION 2
ELECTRICAL ADJUSTMENTS

[MW SECTION]

BAND switch : MW

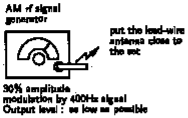

[SW SECTION]

BAND switch : SW

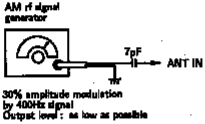

[FM SECTION]

BAND switch : FM

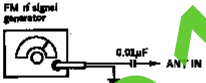

- Repeat the procedures in each adjustment several times, and the frequency coverage and tracking adjustments should be finally done by the trimmer capacitors.
- SW1 to 7 Tracking Adjustment frequencies are in a line on the scale.
  Therefore, on adjusting, first SW1 6.1 MHz and after adjust SW2 to 7 Tracking without moving the dial pointer.

( ): AEP, UK, Germany, Italian, Saudi Arabian model

MW IF ADJUSTMENT	
Adjust for a maximum reading on VTVM.	
T3	455 kHz

MW FREQUENCY COVERAGE ADJUSTMENT	
Adjust for a maximum reading on VTVM.	
L15	[illegible] kHz
CT2-3	1750 kHz (1650 kHz)

MW TRACKING ADJUSTMENT	
Adjust for a maximum reading on VTVM.	
L[illegible]	[illegible] kHz
CT2-[illegible]	1400 kHz

SW IF (1) ADJUSTMENT	
Adjust for a maximum reading on VTVM.	
[illegible]	10.6 MHz

SW IF (2) ADJUSTMENT	
Adjust for a maximum reading on VTVM.	
T[illegible]	455 kHz

SW FREQUENCY COVERAGE ADJUSTMENT	
Adjust for a maximum reading on VTVM.	
T4	5.75 MHz
CT1	6.45 MHz

SW1 TRACKING ADJUSTMENT	
Adjust for a maximum reading on VTVM.	
L1	6.1 MHz

SW2 TRACKING ADJUSTMENT	
Adjust for a maximum reading on VTVM.	
L2	7.2 MHz

SW3 TRACKING ADJUSTMENT	
Adjust for a maximum reading on VTVM.	
L3	9.7 MHz

SW4 TRACKING ADJUSTMENT	
Adjust for a maximum reading on VTVM.	
L4	11.94 MHz

eps-H315KK.C

SW5 TRACKING ADJUSTMENT	
Adjust for a maximum reading on VTVM.	
L5	15.325 MHz

SW6 TRACKING ADJUSTMENT	
Adjust for a maximum reading on VTVM.	
L6	17.825 MHz

SW7 TRACKING ADJUSTMENT	
Adjust for a maximum reading on VTVM.	
L7	21.65 MHz

FM FREQUENCY COVERAGE ADJUSTMENT	
Adjust for a maximum reading on VTVM.	
L14	75.0 MHz (87.35 MHz)
CT2-2	109.5 MHz (108.05 MHz)

FM TRACKING ADJUSTMENT	
Adjust for a maximum reading on VTVM.	
L13	80 MHz (87.35 MHz)
CT2-1	104 MHz (108.05 MHz)

ADJUSTMENT LOCATION

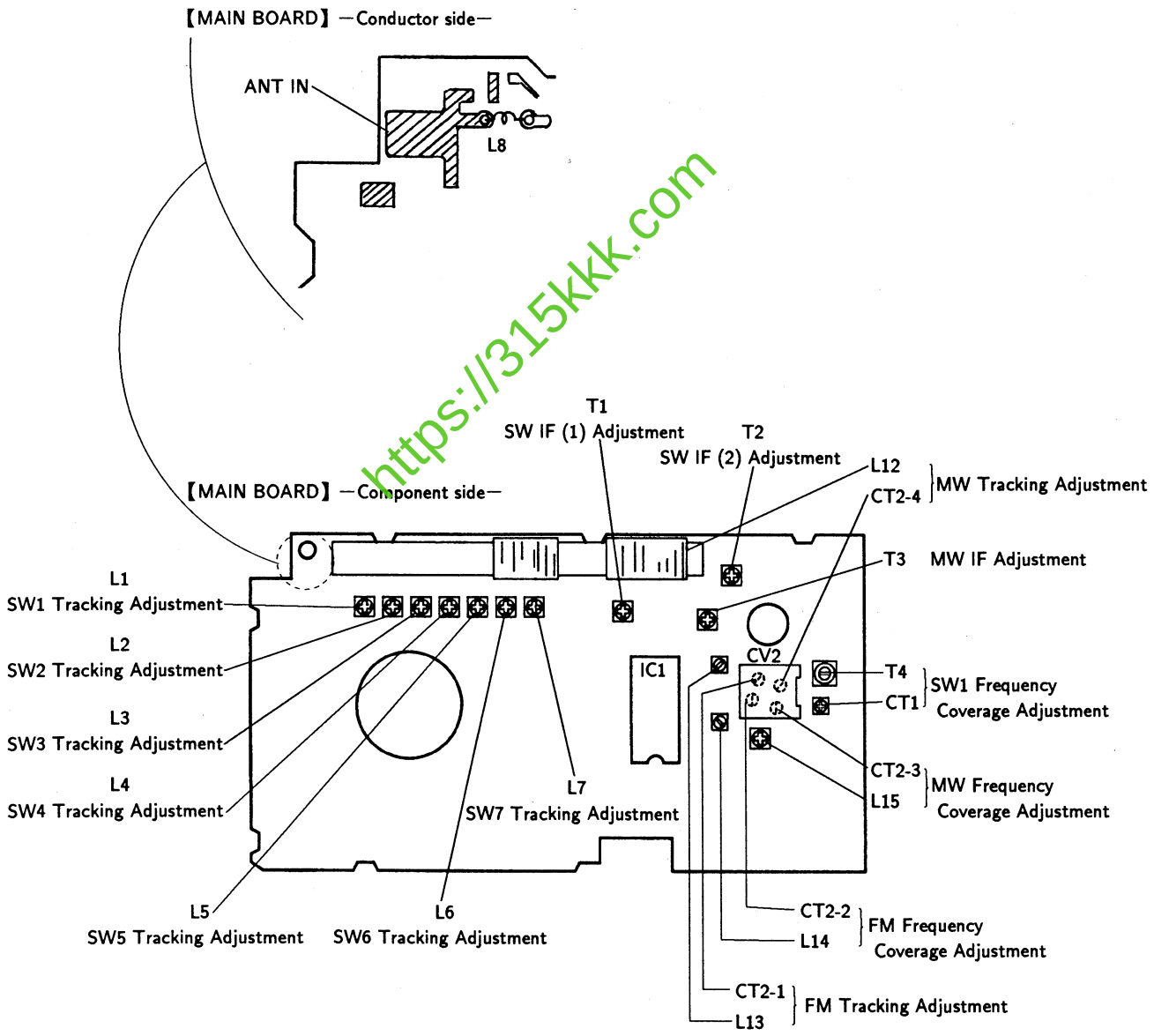

https://315kkk.com

SW5 TRACKING ADJUSTMENT	
Adjust for a maximum reading on VTVM.	
L5	15.325 MHz

SW6 TRACKING ADJUSTMENT	
Adjust for a maximum reading on VTVM.	
L6	17.825 MHz

SW7 TRACKING ADJUSTMENT	
Adjust for a maximum reading on VTVM.	
L7	21.65 MHz

FM FREQUENCY COVERAGE ADJUSTMENT	
Adjust for a maximum reading on VTVM.	
L14	75.0 MHz (87.35 MHz)
CT2-2	109.5 MHz (108.05 MHz)

FM TRACKING ADJUSTMENT	
Adjust for a maximum reading on VTVM.	
L13	80 MHz (87.35 MHz)
CT2-1	104 MHz (108.05 MHz)

ADJUSTMENT LOCATION

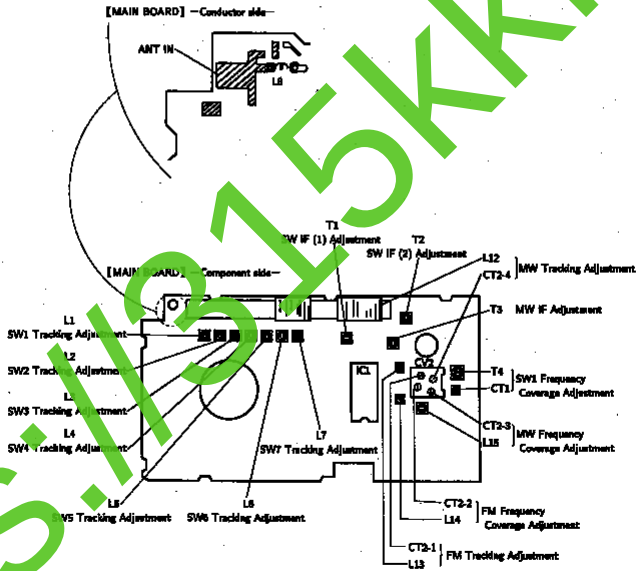

eps://215kkk.c

SECTION 4
EXPLODED VIEW

NOTE:

- -XX,-X mean standardized parts, so they may have some difference from the original one.
- Color indication of Appearance Parts.
  Example:
  KNOB,BALANCE (WHITE) . . . (RED)
  ↑ Parts Color ↑ Cabinet's Color
- Items marked "*" are not stocked since they are seldom required for routine service. Some delay should be anticipated when ordering these items.
- The mechanical parts with no reference number in the exploded views are not supplied.
- Hardware (# mark) list is given in the last of this parts list.

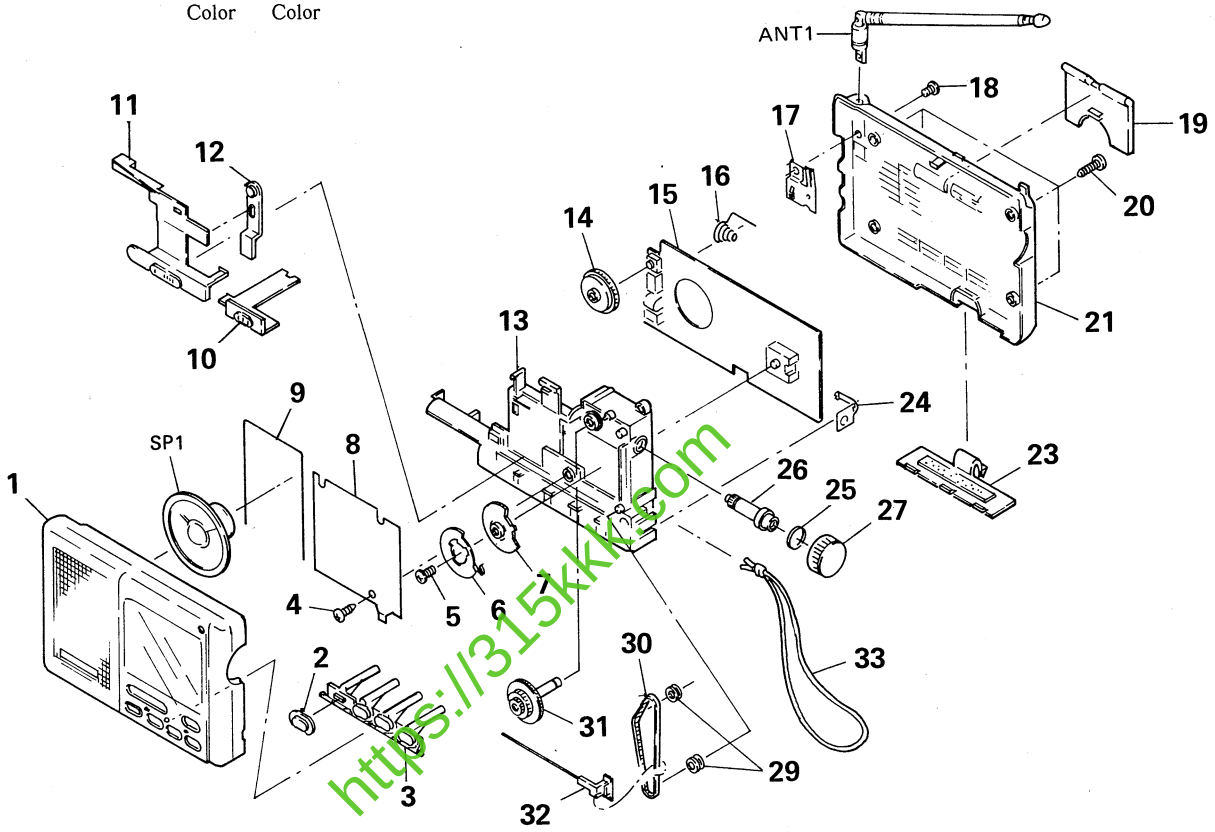

https://315kkk.com

Ref. No.	Part No.	Description	Remark
1	X-3365-618-1	CABINET (FRONT) ASSY (US, Canadian, E, TOURIST, Australian)	
1	X-3365-619-1	CABINET (FRONT) ASSY (AEP, Germany, UK, Italian, Saudi Arabia)	
2	3-380-912-01	BUTTON (OFF)	
3	3-380-923-01	BAND, BUTTON	
4	7-685-131-19	SCREW +P 2.6X4 TYPE2 NON-SLIT	
5	3-880-990-00	SCREW (1.7X3), FLAT, (+) SPECIAL	
6	3-382-003-01	GEAR (B), TUNING CAPACITOR	
7	3-380-914-01	GEAR (A), TUNING CAPACITOR	
8	3-380-915-01	SCALE, DIAL	
9	3-382-325-01	SPRING (SP)	
10	3-380-917-01	KNOB (HOLD)	
11	3-380-921-01	KNOB (SW)	
12	3-380-911-01	INDICATOR	
* 13	3-380-926-01	CHASSIS	
14	3-380-913-01	KNOB (VOL)	
* 15	A-3679-409-A	MAIN BOARD, COMPLETE) (AEP, Germany, UK, Italian, Saudi Arabia)	
* 15	A-3679-410-A	MAIN BOARD, COMPLETE (US, Canadian, E, TOURIST, Australian)	

Ref. No.	Part No.	Description	Remark
16	3-382-322-01	TERMINAL (MINUS), BATTERY	
17	3-382-005-01	PLATE, CONTACT, ANTENNA	
18	7-627-556-37	SCREW, PRECISION +P2.6X4 TYPE 1	
19	3-380-918-01	STAND	
20	7-685-138-19	SCREW +P 2.6X16 TYPE2 NON-SLIT	
21	3-380-925-01	CABINET (REAR)	
23	3-380-922-01	LID, BATTERY CASE	
24	3-382-006-01	TERMINAL, BATTERY	
25	3-900-151-01	SPRING, RING	
26	3-380-908-01	SHAFT (TUN)	
27	3-380-909-01	KNOB (TUN)	
29	3-900-157-01	PULLEY	
30	3-382-324-01	BELT (TUN)	
31	3-380-910-01	GEAR, MIDWAY	
32	3-380-916-01	POINTER	
33	3-383-019-01	STRAP, HAND	
ANT1	1-501-543-11	ANTENNA, TELESCOPIC	
SP1	1-544-758-11	SPEAKER (6.6CM)	

SECTION 4
EXPLODED VIEW

NOTE:

- -XX,-X mean standardized parts, so they may have some difference from the original one.
- Color indication of Appearance Parts.
  Example:
  KNOB,BALANCE (WHITE) . . . (RED)
  ↑ Parts Color ↑ Cabinet's Color
- Items marked "*" are not stocked since they are seldom required for routine service. Some delay should be anticipated when ordering these items.
- The mechanical parts with no reference number in the exploded views are not supplied.
- Hardware (# mark) list is given in the l[illegible] of this parts list.

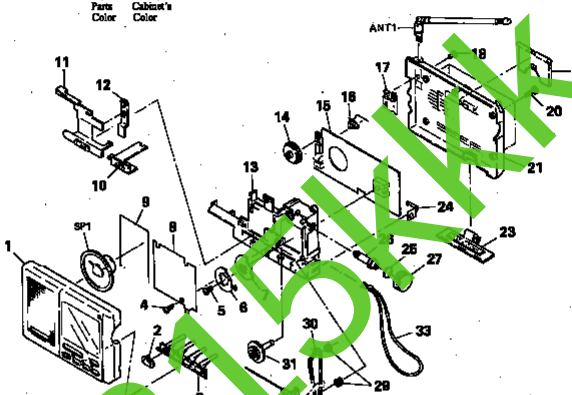

Ref. No.	Part No.	Description	Remarks
1	X-33[illegible]-[illegible]18-1	CABINET (FRONT) ASSY (US, Canadian, E, TOURIST, Australian)	
1	X-3385-[illegible]	CABINET (FRONT) ASSY (AEP, Germany, [illegible], Saudi Arabia)	
2	[illegible]-[illegible]-612-01	[illegible]TON (OFF)	
3	[illegible]-[illegible]-923-01	[illegible] BUTTON	
4	7-[illegible]-131-19	SCREW +P 2.6X4 TYPE2 NON-SLIT	
5	3-6[illegible]-[illegible]-01	SCREW (2.7X3), FLAT, (+) SPECIAL	
6	3-382-[illegible]-01	GEAR (B), TUNING CAPACITOR	
7	3-38[illegible]-61[illegible]	GEAR (A), TUNING CAPACITOR	
8	3-[illegible]-615-01	SCALE, DIAL	
9	3-[illegible]-385-01	SPRING (SP)	
10	3-380-817-01	KNOB (BALL)	
11	3-380-821-01	KNOB (SW)	
12	3-380-811-01	INDICATOR	
13	3-380-826-01	CHASSIS	
14	3-380-813-01	KNOB (VOL)	
* 15	A-3678-409-A	MAIN BOARD, COMPLETE (AEP, Germany, UK, Italian, Saudi Arabia)	
* 15	A-3679-410-A	MAIN BOARD, COMPLETE (US, Canadian, E, TOURIST, Australian)	
16	3-282-282-01	TERMINAL (MINUS), BATTERY	
17	3-282-005-01	PLATE, CONTACT, ANTENNA	
18	7-627-556-37	SCREW, PRECISION +P2.6X4 TYPE 1	
18	3-360-816-01	STAND	
23	7-625-130-19	SCREW +P 2.6X16 TYPE2 NON-SLIT	
24	3-380-925-01	CABINET (REAR)	
23	3-380-822-01	LID, BATTERY CASE	
24	3-382-008-01	TERMINAL, BATTERY	
25	3-900-151-01	SPRING, RING	
26	3-380-803-01	SHAFT (TUN)	
27	3-380-809-01	KNOB (TUN)	
29	3-800-157-01	PULLEY	
30	3-382-224-01	BELT (TUN)	
31	3-380-810-01	GEAR, MIDWAY	
32	3-360-816-01	POINTER	
33	3-383-019-01	STRAP, BAND	
ANT1	1-501-543-11	ANTENNA, TELESCOPIC	
SP1	1-544-758-11	SPEAKER (8.6CM)	

eps://315kk.c

SECTION 5
ELECTRICAL PARTS LIST

NOTE:
- Due to standardization, replacements in the parts list may be different from the parts specified in the diagrams or the components used on the set.
- -XX and -X mean standardized parts, so they may have some difference from the original one.
- RESISTORS
  All resistors are in ohms.
  METAL:Metal-film resistor.
  METAL OXIDE: Metal oxide-film resistor.
  F:nonflammable
- Items marked "*" are not stocked since they are seldom required for routine service. Some delay should be anticipated when ordering these items.
- SEMICONDUCTORS
  In each case, u:μ, for example:
  uA ..: μA.. uPA..: μPA..
  uPB..: μPB.. uPC..: μPC.. uPD..: μPD..
- CAPACITORS
  uF: μF
- COILS
  uH: μH

When indicating parts by reference number, please include the board.

Ref. No.	Part No.	Description			Remark
*	A-3679-409-A	MAIN BOARD, COMPLETE) (AEP, Germany, UK, Italian, Saudi Arabia)			
*	A-3679-410-A	MAIN BOARD, COMPLETE (US, Canadian, E, TOURIST, Australian)			
		**********			
*	3-380-924-01	HOLDER			
		< BAND PASS FILTER >			
BPF1	1-239-359-11	FILTER, BAND PASS (AEP, Germany, UK, Italian, Saudi Arabia)			
BPF1	1-239-360-11	FILTER, BAND PASS (US, Canadian, E, TOURIST, Australian)			
		< CAPACITOR >			
C1	1-164-232-11	CERAMIC CHIP	0.01uF		50V
C2	1-164-232-11	CERAMIC CHIP	0.01uF		50V
C3	1-164-232-11	CERAMIC CHIP	0.01uF		50V
C5	1-163-009-11	CERAMIC CHIP	0.001uF	10%	50V
C6	1-163-095-00	CERAMIC CHIP	12PF	5%	50V
C7	1-126-154-11	ELECT	47uF	20%	6.3V
C8	1-164-232-11	CERAMIC CHIP	0.01uF		50V
C9	1-164-232-11	CERAMIC CHIP	0.01uF		50V
C10	1-164-232-11	CERAMIC CHIP	0.01uF		50V
C11	1-164-232-11	CERAMIC CHIP	0.01uF		50V
C13	1-164-232-11	CERAMIC CHIP	0.01uF		50V
C14	1-163-083-00	CERAMIC CHIP	1PF		50V
C15	1-163-100-00	CERAMIC CHIP	20PF	5%	50V
		(AEP, Germany, UK, Italian, Saudi Arabia)			
C15	1-163-102-00	CERAMIC CHIP	24PF	5%	50V
		(US, Canadian, E, TOURIST, Australian)			
C16	1-163-099-00	CERAMIC CHIP	18PF	5%	50V
		(US, Canadian, E, TOURIST, Australian)			
C16	1-163-104-00	CERAMIC CHIP	30PF	5%	50V
		(AEP, Germany, UK, Italian, Saudi Arabia)			

Ref. No.	Part No.	Description			Remark
C17	1-163-229-11	CERAMIC CHIP	12PF	5%	50V
C18	1-164-232-11	CERAMIC CHIP	0.01uF		50V
C19	1-164-004-11	CERAMIC CHIP	0.1uF	10%	25V
C20	1-164-004-11	CERAMIC CHIP	0.1uF	10%	25V
C21	1-126-163-11	ELECT	4.7uF	20%	50V
C23	1-164-232-11	CERAMIC CHIP	0.01uF		50V
C24	1-164-232-11	CERAMIC CHIP	0.01uF		50V
C25	1-126-163-11	ELECT	4.7uF	20%	50V
C26	1-126-163-11	ELECT	4.7uF	20%	50V
C27	1-126-096-11	ELECT	10uF	20%	35V
C28	1-163-037-11	CERAMIC CHIP	0.022uF	10%	25V
C29	1-124-234-00	ELECT	22uF	20%	16V
C30	1-124-472-11	ELECT	470uF	20%	10V
C31	1-164-004-11	CERAMIC CHIP	0.1uF	10%	25V
C32	1-164-346-11	CERAMIC CHIP	1uF		16V
C33	1-124-442-00	ELECT	330uF	20%	6.3V
C34	1-126-154-11	ELECT	47uF	20%	6.3V
C35	1-163-003-11	CERAMIC CHIP	330PF	10%	50V
C36	1-163-001-11	CERAMIC CHIP	220PF	10%	50V
C37	1-163-113-00	CERAMIC CHIP	68PF	5%	50V
C38	1-163-111-00	CERAMIC CHIP	56PF	5%	50V
C39	1-164-232-11	CERAMIC CHIP	0.01uF		50V
C40	1-163-809-11	CERAMIC CHIP	0.047uF	10%	25V
C41	1-163-111-00	CERAMIC CHIP	56PF	5%	50V
C42	1-163-377-11	CERAMIC CHIP	100PF	5%	50V
C43	1-163-251-11	CERAMIC CHIP	100PF	5%	50V
C44	1-163-251-11	CERAMIC CHIP	100PF	5%	50V
C45	1-126-096-11	ELECT	10uF	20%	35V
C49	1-126-154-11	ELECT	47uF	20%	6.3V
C50	1-126-163-11	ELECT	4.7uF	20%	50V
C52	1-164-232-11	CERAMIC CHIP	0.01uF		50V
C53	1-164-232-11	CERAMIC CHIP	0.01uF		50V
C54	1-164-232-11	CERAMIC CHIP	0.01uF		50V
C55	1-164-232-11	CERAMIC CHIP	0.01uF		50V
C56	1-164-232-11	CERAMIC CHIP	0.01uF		50V

https://315kkk.com

SECTION 5
ELECTRICAL PARTS LIST

NOTE:

- Due to standardization, replacements in the parts list may be different from the parts specified in the diagrams or the components used on the set.
- -XX and -X mean standardized parts, so they may have some differences from the original one.
- RESISTORS
  All resistors are in ohms.
  METAL:Metal-film resistor.
  METAL OXIDE: Metal oxide-film resistor.
  F:nonflammable
- Items marked "*" are not stocked since they are seldom required for routine service. Some delay should be anticipated when ordering these items.
- SEMICONDUCTORS
  In each case, u:μ, for example:
  uA..: μA.. uPA..: μPA..
  uPB..: μPB.. uPC..: μPC.. uPD..: μPD..
- CAPACITORS
  uF: μF
- COILS
  uH: μH

When indicating parts by reference number, please include the board.

Ref. No.	Part No.	Description			Remark
*	A-3579-408-A	MAIN BOARD, COMPLETE (AEP, Germany, UK, Italian, Saudi Arabia)			
*	A-3579-410-A	MAIN BOARD, COMPLETE (US, Canadian, E, TOURIST, Australian)			
*	3-380-824-01	HOLDER			
		< BAND PASS FILTER >			
BPF1	1-238-359-11	FILTER, BAND PASS (AEP, Germany, UK, Italian, Saudi Arabia)			
BPF1	1-238-360-11	FILTER, BAND PASS (US, Canadian, E, TOURIST, Australian)			
		< CAPACITOR >			
C1	1-[illegible]-232-11	CERAMIC CHIP [illegible]			50V
C2	1-[illegible]-232-11	CERAMIC CHIP 0.01uF			50V
C3	1-16[illegible]-232-11	CERAMIC CHIP 0.01uF			50V
C4	1-163-[illegible]-11	CERAMIC CHIP 0.01uF	10%		50V
C6	1-163-035-[illegible]	CERAMIC CHIP [illegible]	5%		50V
C7	1-126-154-11	ELECT 47uF	20%		6.3V
C8	1-164-232-11	CERAMIC CHIP 0.01uF			50V
C9	1-164-232-11	CERAMIC CHIP 0.01uF			50V
C10	1-1[illegible]-232-11	CERAMIC CHIP 0.01uF			50V
C11	1-164-[illegible]-11	CERAMIC CHIP 0.01uF			50V
C13	1-164-[illegible]-11	CERAMIC CHIP 0.01uF			50V
C14	1-163-083-00	CERAMIC CHIP 1PF			50V
C15	1-163-108-00	CERAMIC CHIP 20PF (AEP, Germany, UK, Italian, Saudi Arabia)	5%		50V
C15	1-163-102-00	CERAMIC CHIP 24PF (US, Canadian, E, TOURIST, Australian)	5%		50V
C16	1-163-049-00	CERAMIC CHIP 18PF (US, Canadian, E, TOURIST, Australian)	5%		50V
C18	1-163-184-00	CERAMIC CHIP 30PF (AEP, Germany, UK, Italian, Saudi Arabia)	5%		50V

Ref. No.	Part No.	Description			Remark
C1[illegible]	1-1[illegible]-158-11	CERAMIC CHIP 18PF	5%		50V
C18	1-1[illegible]	CERAMIC CHIP 0.01uF			50V
C19	1-1[illegible]-004-11	CERAMIC CHIP 0.1uF	10%		25V
C20	1-1[illegible]-104-11	CERAMIC CHIP 0.1uF	10%		25V
C21	1-12[illegible]-11	ELECT 4.7uF	20%		50V
C23	1-164-232-11	CERAMIC CHIP 0.01uF			50V
C24	1-164-232-11	CERAMIC CHIP 0.01uF			50V
C25	1-126-183-11	ELECT 4.7uF	20%		50V
C26	1-126-183-11	ELECT 4.7uF	20%		50V
C27	1-126-088-11	ELECT 10uF	20%		25V
C28	1-163-037-11	CERAMIC CHIP 0.022uF	10%		25V
C29	1-124-234-00	ELECT 22uF	20%		16V
C30	1-124-672-11	ELECT 470uF	20%		10V
C31	1-164-004-11	CERAMIC CHIP 0.1uF	10%		25V
C32	1-164-248-11	CERAMIC CHIP 1uF			16V
C33	1-124-642-00	ELECT 330uF	20%		6.3V
C34	1-125-154-11	ELECT. 47uF	20%		6.3V
C35	1-163-003-11	CERAMIC CHIP 330PF	10%		50V
C36	1-163-001-11	CERAMIC CHIP 220PF	10%		50V
C37	1-163-113-00	CERAMIC CHIP 68PF	5%		50V
C38	1-163-111-00	CERAMIC CHIP 56PF	5%		50V
C39	1-164-232-11	CERAMIC CHIP 0.01uF			50V
C40	1-163-808-11	CERAMIC CHIP 0.047uF	10%		25V
C41	1-163-111-00	CERAMIC CHIP 56PF	5%		50V
C42	1-163-277-11	CERAMIC CHIP 100PF	5%		50V
C43	1-163-251-11	CERAMIC CHIP 180PF	5%		50V
C44	1-163-251-11	CERAMIC CHIP 180PF	5%		50V
C45	1-126-186-11	ELECT 10uF	20%		35V
C46	1-126-154-11	ELECT 47uF	20%		6.3V
C50	1-126-183-11	ELECT 4.7uF	20%		50V
C52	1-164-232-11	CERAMIC CHIP 0.01uF			50V
C53	1-164-232-11	CERAMIC CHIP 0.01uF			50V
C54	1-164-232-11	CERAMIC CHIP 0.01uF			50V
C55	1-164-232-11	CERAMIC CHIP 0.01uF			50V
C56	1-164-232-11	CERAMIC CHIP 0.01uF			50V

eps.131.bkk.c

MAIN

Ref. No.	Part No.	Description			Remark
C57	1-164-232-11	CERAMIC CHIP	0.01uF		50V
C58	1-162-638-11	CERAMIC CHIP	1uF		16V
C59	1-164-004-11	CERAMIC CHIP	0.1uF	10%	25V
C60	1-164-232-11	CERAMIC CHIP	0.01uF		50V
C61	1-124-234-00	ELECT	22uF	20%	16V
C62	1-164-232-11	CERAMIC CHIP	0.01uF		50V
C63	1-126-154-11	ELECT	47uF	20%	6.3V
C64	1-164-232-11	CERAMIC CHIP	0.01uF		50V
C65	1-163-090-00	CERAMIC CHIP	7PF		50V
C66	1-162-638-11	CERAMIC CHIP	1uF		16V
C67	1-163-020-00	CERAMIC CHIP	0.0082uF	10%	50V
C68	1-163-023-00	CERAMIC CHIP	0.015uF	5%	50V
C69	1-163-022-00	CERAMIC CHIP	0.012uF	10%	50V
C70	1-163-016-00	CERAMIC CHIP	0.0039uF	10%	50V
C71	1-163-010-11	CERAMIC CHIP	0.0012uF	10%	50V
C74	1-163-085-00	CERAMIC CHIP	2PF		50V
		(AEP, Germany, UK, Italian, Saudi Arabia)			
C74	1-163-086-00	CERAMIC CHIP	3PF		50V
		(US, Canadian, E, TOURIST, Australian)			
C75	1-126-096-11	ELECT	10uF	20%	35V
C76	1-163-117-00	CERAMIC CHIP	100PF	5%	50V
C77	1-164-004-11	CERAMIC CHIP	0.1uF	10%	25V
C78	1-164-232-11	CERAMIC CHIP	0.01uF		50V
C79	1-163-088-00	CERAMIC CHIP	5PF		50V
		< FILTER >			
CF1	1-567-097-61	FILTER, CERAMIC			
CF2	1-577-647-11	FILTER, CERAMIC			
CF3	1-577-047-11	FILTER, CERAMIC			
		< TRIMMER >			
CT1	1-141-304-21	CAP, TRIMMER	10PF		
		< VARIABLE CAPACITOR >			
CV2	1-151-649-11	CAP, VARIABLE			
CT2		(AEP, Germany, UK, Italian, Saudi Arabia)			
CV2	1-151-650-11	CAP, VARIABLE			
CT2		(US, Canadian, E, TOURIST, Australian)			
		< DIODE >			
D1	8-719-123-79	DIODE	1SS279		
D2	8-719-123-79	DIODE	1SS279		
D3	8-719-123-79	DIODE	1SS279		
D4	8-719-800-76	DIODE	1SS226		
D5	8-719-400-18	DIODE	MA152WK		
D10	8-719-800-76	DIODE	1SS226		

Ref. No.	Part No.	Description		Remark
D11	8-719-812-41	LED	TLR124	
D12	8-719-812-41	LED	TLR124	
D13	8-719-812-41	LED	TLR124	
D14	8-719-812-41	LED	TLR124	
D15	8-719-800-76	DIODE	1SS226	
		< IC >		
IC1	8-752-035-29	IC	CXA1019S	
IC2	8-759-979-91	IC	CF77392NS	
IC3	8-759-937-61	IC	S-81230AG	
		< JACK >		
J1	1-563-836-21	JACK (EARPHONE)		
J2	1-580-681-21	JACK, DC (POLARITY UNIFIED TYPE)		
		< COIL >		
L1	1-402-334-11	COIL (ANT)		
L2	1-402-332-11	COIL (ANT)		
L3	1-402-397-11	COIL (ANT)		
L4	1-402-331-11	COIL (ANT)		
L5	1-406-261-11	COIL (OSC)		
L6	1-402-433-11	COIL (ANT)		
L7	1-402-330-11	COIL (ANT)		
L8	1-414-021-11	INDUCTOR	0.82uH	
L9	1-414-027-11	INDUCTOR	8.2uH	
L10	1-410-967-11	INDUCTOR	2.2uH	
L11	1-410-322-11	INDUCTOR	3.3uH	
L12	1-402-628-11	ANTENNA, FERRITE-ROD (MW)		
		(AEP, Germany, UK, Italian, Saudi Arabia)		
L12	1-402-633-11	ANTENNA, FERRITE-ROD (MW)		
		(US, Canadian, E, TOURIST, Australian)		
L13	1-460-351-11	COIL (WITH CORE)		
L14	1-460-348-11	COIL (WITH CORE)		
		(AEP, Germany, UK, Italian, Saudi Arabia)		
L14	1-460-349-11	COIL (WITH CORE)		
		(US, Canadian, E, TOURIST, Australian)		
L15	1-406-255-11	COIL (OSC)		
		< TRANSISTOR >		
Q1	8-729-117-83	TRANSISTOR	2SK160A-K25	
Q2	8-729-116-64	TRANSISTOR	2SK508-K51	
Q3	8-729-220-93	TRANSISTOR	2SK209-G	
Q4	8-729-102-07	TRANSISTOR	2SC2223-F13	
Q5	8-729-102-07	TRANSISTOR	2SC2223-F13	
Q6	8-729-402-84	TRANSISTOR	XN4601	

https://315kkk.com

MAIN

Ref. No.	Part No.	Description		Remark
C57	1-164-232-11	CERAMIC CHIP 0.01uF		50V
C58	1-162-838-11	CERAMIC CHIP 1uF		16V
C59	1-164-004-11	CERAMIC CHIP 0.1uF	10%	25V
C60	1-164-232-11	CERAMIC CHIP 0.01uF		50V
C61	1-164-234-00	ELECT 22uF	20%	16V
C62	1-164-232-11	CERAMIC CHIP 0.01uF		50V
C63	1-128-154-11	ELECT 47uF	20%	6.3V
C64	1-164-232-11	CERAMIC CHIP 0.01uF		50V
C65	1-163-038-00	CERAMIC CHIP 75P		50V
C66	1-162-838-11	CERAMIC CHIP 1uF		16V
C67	1-163-229-00	CERAMIC CHIP 0.0033uF	10%	50V
C68	1-163-223-00	CERAMIC CHIP 0.015uF	5%	50V
C69	1-163-222-00	CERAMIC CHIP 0.012uF	10%	50V
C70	1-163-018-00	CERAMIC CHIP 0.0039uF	10%	50V
C71	1-163-010-11	CERAMIC CHIP 0.0012uF	10%	50V
C74	1-163-065-00	CERAMIC CHIP 27P		50V
		(AEP, Germany, UK, Italian, Saudi Arabia)		
C74	1-163-068-00	CERAMIC CHIP 30P		50V
		(US, Canadian, E, TOURIST, Australian)		
C75	1-128-056-11	ELECT 10uF	20%	50V
C76	1-163-117-00	CERAMIC CHIP 100PF	5%	[illegible]
C77	1-164-004-11	CERAMIC CHIP 0.1uF	10%	25V
C78	1-164-232-11	CERAMIC CHIP 0.01uF		50V
C79	1-163-038-00	CERAMIC CHIP 75P		50V
		< FILTER >		
CF1	1-567-097-00	FILTER, CERAMIC		
CF2	1-577-047-11	FILTER, CERAMIC		
CF3	1-577-047-11	FILTER, CERAMIC		
		< TRIMMER >		
CT1	1-141-354-11	CAP, TRIMMER [illegible]		
		< VARIABLE CAPACITOR >		
CV1	1-161-042-11	CAP, VARIABLE		
CV2		(AEP, Germany, UK, Italian, Saudi Arabia)		
CV2	1-161-038-11	CAP, VARIABLE		
CV2		(US, Canadian, E, TOURIST, Australian)		
		< DIODE >		
D1	8-719-123-79	DIODE 1SS279		
D2	8-719-123-79	DIODE 1SS279		
D3	8-719-123-79	DIODE 1SS279		
D4	8-719-800-76	DIODE 1SS229		
D5	8-719-800-18	DIODE MA152WK		
D6	8-719-880-76	DIODE 1SS229		

Ref. No.	Part No.	Description	Remark
D11	8-719-812-41	LED TLRL84	
D12	8-719-812-41	LED TLRL84	
D13	8-719-812-41	LED TLRL84	
D14	8-719-812-41	LED TLRL84	
D15	8-719-880-76	DIODE 1SS229	
		< IC >	
IC1	8-752-036-29	IC CXA[illegible]	
IC2	8-759-879-41	IC CF7730[illegible]	
IC3	8-759-837-41	IC S-81230NU	
		< JACK >	
J1	1-569-[illegible]	JACK ([illegible]PHONE)	
J2	1-560-841-[illegible]	JACK ([illegible] POLARITY UNIFIED TYPE)	
		< COIL >	
L1	1-40[illegible]-34-11	COIL (ANT)	
L2	1-40[illegible]-22-11	COIL (ANT)	
L3	1-40[illegible]	COIL (ANT)	
L4	1-[illegible]21-11	COIL (ANT)	
L5	1-[illegible]51-11	COIL (OSC)	
L6	1-402-4[illegible]	COIL (ANT)	
L7	1-402-330-11	COIL (ANT)	
L8	1-414-027-11	INDUCTOR 8.2uH	
L9	1-414-027-11	INDUCTOR 8.2uH	
L10	1-410-867-11	INDUCTOR 2.2uH	
L11	1-410-222-11	INDUCTOR 3.3uH	
L12	1-482-826-11	ANTENNA, FERRITE-ROD (AM)	
		(AEP, Germany, UK, Italian, Saudi Arabia)	
L12	1-482-825-11	ANTENNA, FERRITE-ROD (AM)	
		(US, Canadian, E, TOURIST, Australian)	
L13	1-469-351-11	COIL (WITH CORE)	
L14	1-458-348-11	COIL (WITH CORE)	
		(AEP, Germany, UK, Italian, Saudi Arabia)	
L14	1-458-349-11	COIL (WITH CORE)	
		(US, Canadian, E, TOURIST, Australian)	
L15	1-808-255-11	COIL (OSC)	
		< TRANSISTOR >	
Q1	8-729-117-63	TRANSISTOR 2SK1824A-E25	
Q2	8-729-116-64	TRANSISTOR 2SC5086-KS1	
Q3	8-729-228-53	TRANSISTOR 2SK208-G	
Q4	8-729-102-07	TRANSISTOR 2SC2229-F13	
Q5	8-729-102-07	TRANSISTOR 2SC2229-F13	
Q6	8-729-402-84	TRANSISTOR XN4401	

ps://315kk.c

Ref. No.	Part No.	Description				Remark
Q7	8-729-402-13	TRANSISTOR	XN1501			
Q9	8-729-807-87	TRANSISTOR	2SB1295-UL6			
Q10	8-729-402-84	TRANSISTOR	XN4601			
Q13	8-729-120-28	TRANSISTOR	2SC1623-L5L6			
Q15	8-729-402-84	TRANSISTOR	XN4601			
		< RESISTOR >				
R1	1-216-057-00	METAL CHIP	2.2K	5%	1/10W	
R2	1-216-091-00	METAL CHIP	56K	5%	1/10W	
R3	1-216-041-00	METAL CHIP	470	5%	1/10W	
R4	1-216-040-00	METAL GLAZE	430	5%	1/10W	
R5	1-216-097-00	METAL CHIP	100K	5%	1/10W	
R6	1-216-059-00	METAL CHIP	2.7K	5%	1/10W	
R7	1-216-041-00	METAL CHIP	470	5%	1/10W	
R8	1-216-065-00	METAL CHIP	4.7K	5%	1/10W	
R9	1-216-063-00	METAL CHIP	3.9K	5%	1/10W	
R10	1-216-063-00	METAL CHIP	3.9K	5%	1/10W	
R11	1-216-073-00	METAL CHIP	10K	5%	1/10W	
R12	1-216-057-00	METAL CHIP	2.2K	5%	1/10W	
R13	1-216-082-00	METAL GLAZE	24K	5%	1/10W	
R14	1-216-049-00	METAL CHIP	1K	5%	1/10W	
R15	1-216-067-00	METAL CHIP	5.6K	5%	1/10W	
R16	1-216-295-00	METAL CHIP	0	5%	1/10W	
R18	1-216-037-00	METAL CHIP	330	5%	1/10W	
R19	1-216-077-00	METAL CHIP	15K	5%	1/10W	
R20	1-216-105-00	METAL CHIP	220K	5%	1/10W	
R21	1-216-049-00	METAL CHIP	1K	5%	1/10W	
R22	1-216-049-00	METAL CHIP	1K	5%	1/10W	
R23	1-216-114-00	METAL GLAZE	510K	5%	1/10W	
R24	1-216-105-00	METAL CHIP	220K	5%	1/10W	
R25	1-216-083-00	METAL CHIP	27K	5%	1/10W	
R26	1-216-049-00	METAL CHIP	1K	5%	1/10W	
R27	1-216-043-00	METAL CHIP	560	5%	1/10W	
R28	1-216-058-00	METAL GLAZE	2.4K	5%	1/10W	
R29	1-216-105-00	METAL CHIP	220K	5%	1/10W	
R30	1-216-091-00	METAL CHIP	56K	5%	1/10W	
R31	1-216-057-00	METAL CHIP	2.2K	5%	1/10W	
R32	1-216-081-00	METAL CHIP	22K	5%	1/10W	
R33	1-216-198-00	METAL CHIP	1K	5%	1/8W	
R34	1-216-049-00	METAL CHIP	1K	5%	1/10W	
R35	1-216-025-00	METAL CHIP	100	5%	1/10W	
R36	1-216-059-00	METAL CHIP	2.7K	5%	1/10W	
R37	1-216-689-11	METAL CHIP	39K	0.5%	1/10W	
R38	1-216-065-00	METAL CHIP	4.7K	5%	1/10W	
R39	1-216-065-00	METAL CHIP	4.7K	5%	1/10W	
R40	1-216-097-00	METAL CHIP	100K	5%	1/10W	
R41	1-216-029-00	METAL CHIP	150	5%	1/10W	

Ref. No.	Part No.	Description				Remark
R42	1-216-053-00	METAL CHIP	1.5K	5%	1/10W	
R43	1-216-041-00	METAL CHIP	470	5%	1/10W	
R44	1-216-081-00	METAL CHIP	22K	5%	1/10W	
R45	1-216-049-00	METAL CHIP	1K	5%	1/10W	
R46	1-216-246-00	METAL GLAZE	100K	5%	1/8W	
R47	1-216-246-00	METAL GLAZE	100K	5%	1/8W	
R48	1-216-061-00	METAL CHIP	3.3K	5%	1/10W	
R49	1-216-061-00	METAL CHIP	3.3K	5%	1/10W	
R50	1-216-061-00	METAL CHIP	3.3K	5%	1/10W	
R51	1-216-061-00	METAL CHIP	3.3K	5%	1/10W	
R52	1-216-113-00	METAL CHIP	470K	5%	1/10W	
R53	1-216-073-00	METAL CHIP	10K	5%	1/10W	
R54	1-216-178-00	METAL GLAZE	150	5%	1/8W	
R56	1-216-065-00	METAL CHIP	4.7K	5%	1/10W	
R57	1-216-053-00	METAL CHIP	1.5K	5%	1/10W	
R58	1-216-089-00	METAL CHIP	47K	5%	1/10W	
R59	1-216-057-00	METAL CHIP	2.2K	5%	1/10W	
R60	1-216-041-00	METAL CHIP	470	5%	1/10W	
R61	1-216-190-00	METAL GLAZE	470	5%	1/8W	
R62	1-216-190-00	METAL GLAZE	470	5%	1/8W	
R63	1-216-296-00	METAL CHIP	0	5%	1/8W	
R64	1-216-113-00	METAL CHIP	470K	5%	1/10W	
R65	1-216-089-00	METAL CHIP	47K	5%	1/10W	
R66	1-216-053-00	METAL CHIP	1.5K	5%	1/10W	
R67	1-216-097-00	METAL CHIP	100K	5%	1/10W	
R68	1-216-061-00	METAL CHIP	3.3K	5%	1/10W	
R69	1-216-061-00	METAL CHIP	3.3K	5%	1/10W	
R70	1-216-061-00	METAL CHIP	3.3K	5%	1/10W	
R71	1-216-017-00	METAL CHIP	47	5%	1/10W	
R72	1-216-097-00	METAL CHIP	100K	5%	1/10W	
R73	1-216-296-00	METAL CHIP	0	5%	1/8W	
R74	1-216-296-00	METAL CHIP	0	5%	1/8W	
R75	1-216-296-00	METAL CHIP	0	5%	1/8W	
R76	1-216-296-00	METAL CHIP	0	5%	1/8W	
R77	1-216-296-00	METAL CHIP	0	5%	1/8W	
R78	1-216-296-00	METAL CHIP	0	5%	1/8W	
R79	1-216-296-00	METAL CHIP	0	5%	1/8W	
R80	1-216-296-00	METAL CHIP	0	5%	1/8W	
R81	1-216-295-00	METAL CHIP	0	5%	1/10W	
R82	1-216-296-00	METAL CHIP	0	5%	1/8W	
R83	1-216-296-00	METAL CHIP	0	5%	1/8W	
R84	1-216-296-00	METAL CHIP	0	5%	1/8W	
R85	1-216-296-00	METAL CHIP	0	5%	1/8W	
R86	1-216-296-00	METAL CHIP	0	5%	1/8W	
R87	1-216-296-00	METAL CHIP	0	5%	1/8W	
R88	1-216-296-00	METAL CHIP	0	5%	1/8W	
R89	1-216-296-00	METAL CHIP	0	5%	1/8W	
R90	1-216-296-00	METAL CHIP	0	5%	1/8W	
R91	1-216-296-00	METAL CHIP	0	5%	1/8W	

https://315kkk.com

Ref.No.	Part No.	Description			Remark
Q7	8-729-422-13	TRANSISTOR	2SA1201		
Q8	8-729-307-87	TRANSISTOR	2SB1245-UL6		
Q10	8-729-422-84	TRANSISTOR	2SA1201		
Q13	8-729-120-23	TRANSISTOR	2SC1623-L6L6		
Q15	8-729-422-84	TRANSISTOR	2SA1201		
		< RESISTOR >			
R1	1-216-057-00	METAL CHIP	2.2K	5%	1/10W
R2	1-216-[illegible]	METAL CHIP	55K	5%	1/10W
R3	1-216-041-00	METAL CHIP	470	5%	1/10W
R4	1-216-048-00	METAL GLAZE	43K	5%	1/10W
[illegible]	1-216-037-00	METAL CHIP	100K	5%	1/10W
R6	1-216-[illegible]	METAL CHIP	2.7K	5%	1/10W
R7	1-216-041-00	METAL [illegible]	470	5%	1/10W
R8	1-216-038-00	METAL CHIP	[illegible]7K	5%	1/10W
[illegible]	1-216-053-00	METAL CHIP	[illegible]K	5%	1/10W
R10	1-216-053-00	METAL CHIP	[illegible]K	5%	1/10W
R11	1-216-[illegible]3-00	METAL [illegible]	10K	5%	1/10W
R12	1-216-[illegible]7-00	METAL [illegible]	2.2K	[illegible]	[illegible]
R13	1-216-[illegible]-00	METAL GLAZE	24K	5%	[illegible]
R14	1-216-04[illegible]	METAL GLAZE	1K	5%	[illegible]
R15	1-216-037-00	METAL CHIP	5.6K	5%	1/10W
R16	1-216-285-00	METAL CHIP	0	[illegible]	1/10W
R18	1-216-037-00	METAL CHIP	[illegible]	5%	1/10W
R19	1-216-077-00	METAL CHIP	[illegible]K	5%	1/10W
R20	1-216-105-00	METAL CHIP	[illegible]0K	5%	1/10W
R21	1-216-049-00	METAL CHIP	[illegible]	5%	1/10W
R22	1-216-049-00	METAL CHIP	1K	5%	1/10W
R23	1-216-114-00	METAL GLAZE	91K	5%	1/10W
R24	1-216-105-00	METAL CHIP	220K	5%	[illegible]
R25	1-216-063-00	METAL CHIP	27K	5%	[illegible]
R26	1-216-049-00	METAL CHIP	1K	5%	1/10W
R27	1-216-043-00	METAL CHIP	560	5%	1/10W
R28	1-216-058-00	METAL CHIP	2.4K	5%	1/10W
R29	1-216-105-00	METAL CHIP	220K	5%	1/10W
R30	1-216-031-00	METAL CHIP	5K6	5%	1/10W
R31	1-216-057-00	METAL CHIP	2.2K	5%	1/10W
R32	1-216-081-00	METAL CHIP	22K	5%	1/10W
R33	1-216-049-00	METAL CHIP	1K	5%	1/8W
R34	1-216-049-00	METAL CHIP	1K	5%	1/10W
R35	1-216-025-00	METAL CHIP	160	5%	1/10W
R36	1-216-068-00	METAL CHIP	2.7K	5%	1/10W
R37	1-216-864-11	METAL CHIP	39K	0.5%	1/10W
R38	1-216-065-00	METAL CHIP	4.7K	5%	1/10W
R39	1-216-065-00	METAL CHIP	4.7K	5%	1/10W
R40	1-216-037-00	METAL CHIP	100K	5%	1/10W
R41	1-216-025-00	METAL CHIP	150	5%	1/10W

Ref.No.	Part No.	Description			Remark
R42	1-216-053-00	METAL CHIP	1.5K	5%	1/10W
R43	1-216-041-00	METAL CHIP	470	5%	1/10W
R44	1-216-061-00	METAL CHIP	22K	5%	1/10W
R45	1-216-049-00	METAL CHIP	1K	5%	1/10W
R46	1-216-046-00	METAL GLAZE	10K	5%	1/8W
R47	1-216-046-00	METAL GLAZE	10K	5%	1/8W
R48	1-216-861-00	METAL CHIP	3.3K	5%	1/10W
R49	1-216-861-00	METAL CHIP	3.3K	5%	1/10W
R50	1-216-861-00	METAL CHIP	3.3K	5%	1/10W
R51	1-216-861-00	METAL CHIP	3.3K	5%	1/10W
R52	1-216-113-00	METAL CHIP	470K	5%	1/10W
R53	1-216-073-00	METAL CHIP	10K	5%	1/10W
R54	1-216-178-00	METAL GLAZE	150	5%	1/8W
R55	1-216-065-00	METAL CHIP	4.7K	5%	1/10W
R57	1-216-053-00	METAL CHIP	1.5K	5%	1/10W
R58	1-216-068-00	METAL CHIP	47K	5%	1/10W
R59	1-216-067-00	METAL CHIP	2.2K	5%	1/10W
R60	1-216-041-00	METAL CHIP	470	5%	1/10W
R61	1-216-190-80	METAL GLAZE	470	5%	1/8W
R62	1-216-190-80	METAL GLAZE	470	5%	1/8W
R63	1-216-295-00	METAL CHIP	0	5%	1/8W
R64	1-216-113-00	METAL CHIP	470K	5%	1/10W
R65	1-216-069-00	METAL CHIP	47K	5%	1/10W
R66	1-219-053-00	METAL CHIP	1.5K	5%	1/10W
R67	1-215-097-00	METAL CHIP	180K	5%	1/10W
R68	1-216-061-00	METAL CHIP	3.3K	5%	1/10W
R69	1-216-081-00	METAL CHIP	3.3K	5%	1/10W
R70	1-216-081-00	METAL CHIP	3.3K	5%	1/10W
R71	1-216-117-00	METAL CHIP	47	5%	1/10W
R72	1-216-037-00	METAL CHIP	100K	5%	1/10W
R73	1-216-295-00	METAL CHIP	0	5%	1/8W
R74	1-216-295-00	METAL CHIP	0	5%	1/8W
R75	1-216-295-00	METAL CHIP	0	5%	1/8W
R76	1-216-295-00	METAL CHIP	0	5%	1/8W
R77	1-216-295-00	METAL CHIP	0	5%	1/8W
R78	1-216-295-00	METAL CHIP	0	5%	1/8W
R79	1-216-295-00	METAL CHIP	0	5%	1/8W
R80	1-216-295-00	METAL CHIP	0	5%	1/8W
R81	1-216-295-00	METAL CHIP	0	5%	1/10W
R82	1-216-295-00	METAL CHIP	0	5%	1/8W
R83	1-216-296-00	METAL CHIP	0	5%	1/8W
R84	1-216-296-00	METAL CHIP	0	5%	1/8W
R85	1-216-296-00	METAL CHIP	0	5%	1/8W
R86	1-216-296-00	METAL CHIP	0	5%	1/8W
R87	1-216-296-00	METAL CHIP	0	5%	1/8W
R88	1-216-296-00	METAL CHIP	0	5%	1/8W
R89	1-216-295-00	METAL CHIP	0	5%	1/8W
R90	1-216-295-00	METAL CHIP	0	5%	1/8W
R91	1-216-295-00	METAL CHIP	0	5%	1/8W

MAIN

Ref. No.	Part No.	Description			Remark
R92	1-216-296-00	METAL CHIP	0	5%	1/8W
R93	1-216-296-00	METAL CHIP	0	5%	1/8W
R94	1-216-296-00	METAL CHIP	0	5%	1/8W
R95	1-216-296-00	METAL CHIP	0	5%	1/8W
R96	1-216-296-00	METAL CHIP	0	5%	1/8W
R97	1-216-295-00	METAL CHIP	0	5%	1/10W
R98	1-216-295-00	METAL CHIP	0	5%	1/10W
R99	1-216-295-00	METAL CHIP	0	5%	1/10W
R100	1-216-295-00	METAL CHIP	0	5%	1/10W
R101	1-216-295-00	METAL CHIP	0	5%	1/10W
R102	1-216-295-00	METAL CHIP	0	5%	1/10W
R103	1-216-295-00	METAL CHIP	0	5%	1/10W
R104	1-216-295-00	METAL CHIP	0	5%	1/10W
R105	1-216-296-00	METAL CHIP	0	5%	1/8W
R106	1-216-295-00	METAL CHIP	0	5%	1/10W
R107	1-216-296-00	METAL CHIP	0	5%	1/8W
R108	1-216-295-00	METAL CHIP	0	5%	1/10W
R109	1-216-295-00	METAL CHIP	0	5%	1/10W
R110	1-216-295-00	METAL CHIP	0	5%	1/10W
R111	1-216-295-00	METAL CHIP	0	5%	1/10W
		< VARIABLE RESISTOR >			
RV1	1-238-555-11	RES, VAR, CARBON 50K (VOLUME)			
		< SWITCH >			
S1	1-554-979-11	SWITCH, SLIDE (BAND SELECTOR)			
S2	1-572-761-31	SWITCH, SLIDE (TONE)			
S3	1-553-510-00	SWITCH, SLIDE (HOLD)			
S4	1-692-016-11	SWITCH, KEY BOARD (FM)			
S5	1-692-016-11	SWITCH, KEY BOARD (MW)			
S6	1-692-016-11	SWITCH, KEY BOARD (SW)			
S7	1-692-016-11	SWITCH, KEY BOARD (OFF)			
		< TRANSFORMER >			
T1	1-404-764-11	TRANSFORMER, IF			
T2	1-404-362-61	TRANSFORMER, IF			
T3	1-404-362-61	TRANSFORMER, IF			
T4	1-406-498-11	COIL (OSC)			
		< VIBRATOR >			
X1	1-577-447-11	VIBRATOR, CERAMIC, 16.8MHz			
X2	1-577-448-11	VIBRATOR, CERAMIC, 17.9MHz			
X3	1-577-449-11	VIBRATOR, CERAMIC, 20.4MHz			
X4	1-577-445-11	VIBRATOR, CERAMIC, 22.64MHz			
X5	1-579-684-11	VIBRATOR, CRYSTAL, 26.025MHz			
X6	1-579-685-11	VIBRATOR, CRYSTAL, 28.525MHz			
X7	1-579-686-11	VIBRATOR, CRYSTAL, 32.35MHz			

****

Ref. No.	Part No.	Description	Remark
		MISCELLANEOUS	
		**********	
ANT1	1-501-543-11	ANTENNA, TELESCOPIC	
SP1	1-544-758-11	SPEAKER (6.6CM)	

****

ACCESSORIES & PACKING MATERIALS

****

*	3-381-803-01	INDIVIDUAL CARTON
	3-755-247-01	MANUAL, INSTRUCTION (TOURIST) (JAPANESE/ENGLISH/KOREAN)
	3-755-247-11	MANUAL, INSTRUCTION (ENGLISH/FRENCH/SPANISH/PORTUGUESE/SWEDISH) (US, Canadian, AEP, E, Australian)
	3-755-247-41	MANUAL, INSTRUCTION (ENGLISH/GERMAN/FRENCH/ITALIAN/DUTCH) (AEP, Germany, UK, Italian)
	3-755-247-51	MANUAL, INSTRUCTION (ENGLISH/ARABIC) (Saudi Arabia)
	3-893-940-17	GUIDE, SHORT WAVE
	3-383-148-01	CASE, CARRYING (AEP, Germany, UK, Italian, E, Saudi Arabia, TOURIST, Australian)
	3-383-735-01	CASE, CARRYING (US, Canadian)

https://315kkk.com

9-957-311-11

Sony Corporation
Personal Telecommunications Group

English
92F06100-1
Printed in Japan
©1992.6
Published by Customer Relations and Service Group

MAIN

Ref. No.	Part No.	Description				Remark
R82	1-216-296-00	METAL CHIP	0	5%	1/8W	
R83	1-216-296-00	METAL CHIP	0	5%	1/8W	
R84	1-216-296-00	METAL CHIP	0	5%	1/8W	
R85	1-216-296-00	METAL CHIP	0	5%	1/8W	
R86	1-216-296-00	METAL CHIP	0	5%	1/8W	
R87	1-216-295-00	METAL CHIP	0	5%	1/10W	
R88	1-216-295-00	METAL CHIP	0	5%	1/10W	
R89	1-216-295-00	METAL CHIP	0	5%	1/10W	
R100	1-216-295-00	METAL CHIP	0	5%	1/10W	
R101	1-216-295-00	METAL CHIP	0	5%	1/10W	
R102	1-216-296-00	METAL CHIP	0	5%	1/10W	
R103	1-216-295-00	METAL CHIP	0	5%	1/10W	
R104	1-216-295-00	METAL CHIP	0	5%	1/10W	
R105	1-216-296-00	METAL CHIP	0	5%	1/8W	
R106	1-216-296-00	METAL CHIP	0	5%	1/10W	
R107	1-216-289-00	METAL CHIP	0	5%	1/8W	
R108	1-216-295-00	METAL CHIP	0	5%	1/10W	
R109	1-216-295-00	METAL CHIP	0	5%	1/10W	
R110	1-216-295-00	METAL CHIP	0	5%	1/10W	
R111	1-216-295-00	METAL CHIP	0	5%	1/10W	
		< VARIABLE RESISTOR >				
RV1	1-238-555-11	RES, VAR, CARBON 20K (VOLUME)				
		< SWITCH >				
S1	1-554-879-11	SWITCH, SLIDE (BAND SELECTOR)				
S2	1-572-761-31	SWITCH, SLIDE (TONE)				
S3	1-553-510-00	SWITCH, SLIDE (HOLD)				
S4	1-692-016-11	SWITCH, KEY BOARD (FM)				
S5	1-692-016-11	SWITCH, KEY BOARD (AM)				
S6	1-692-016-11	SWITCH, KEY BOARD (SW)				
S7	1-692-016-11	SWITCH, KEY BOARD (OFF)				
		< TRANSFORMER >				
T1	1-404-704-11	TRANSFORMER, IF				
T2	1-404-362-61	TRANSFORMER, IF				
T3	1-404-362-61	TRANSFORMER, IF				
T4	1-406-458-11	COIL (OSC)				
		< VIBRATOR >				
X1	1-577-447-11	VIBRATOR, CERAMIC, 18.4MHz				
X2	1-577-448-11	VIBRATOR, CERAMIC, 17.9MHz				
X3	1-577-449-11	VIBRATOR, CERAMIC, 20.4MHz				
X4	1-577-445-11	VIBRATOR, CERAMIC, 22.54MHz				
X5	1-576-584-11	VIBRATOR, CRYSTAL, 26.0250MHz				
X6	1-576-585-11	VIBRATOR, CRYSTAL, 26.525MHz				
X7	1-579-584-11	VIBRATOR, CRYSTAL, 32.35MHz				

Ref. No.	Part No.	Description	Remark
		MISCELLANEOUS	
ANT1	1-501-542-11	ANTENNA, TELESCOPIC	
SP1	1-544-738-11	SPEAKER (8.8CM)	

ACCESSORIES & PACKING MATERIALS

*	3-381-863-81	INDIVIDUAL CARTON
	3-755-247-11	MANUAL, INSTRUCTION (TOUR187) (JAPANESE/ENGLISH/KOREAN)
	3-755-247-11	MANUAL, INSTRUCTION (ENGLISH/FRENCH/SPANISH/PORTUGUESE/SWEDISH) (US, Canadian, AEP, E, Australian)
	3-755-247-41	MANUAL, INSTRUCTION (ENGLISH/GERMAN/FRENCH/ITALIAN/DUTCH) (AEP, Germany, UK, Italian)
	3-755-247-51	MANUAL, INSTRUCTION (ENGLISH/ARABIC) (Saudi Arabia)
	3-883-943-17	GUIDE, SHORT WAVE
	3-383-148-01	CASE, CARRYING (AEP, Germany, UK, Italian, E, Saudi Arabia, TOURIST, Australian)
	3-383-735-01	CASE, CARRYING (US, Canadian)

9-857-311-11

Sony Corporation
Personal Telecommunications Group

Printed in Japan
©1989
Published by Customer Relations and Service Group

ds.ru5kkk.co